Input Coupler and Windows for TESLA

M. Champion
Fermi National Accelerator Laboratory
P. O. Box 500, Batavia, Illinois 60510

I. INTRODUCTION

The design criteria [1] for the rf input coupler for TESLA are quite stringent. The basic requirements are given as follows:

Frequency	1.3 GHz
Pulse length	1.3 ms
Repetition rate	10 Hz
Peak power	210 kW
Average power	2.8 kW
External Q	Nominally 3e6, adjustable from 1e6 to 1e7

Additionally, it is desirable that the coupler handle power levels up to 1 MW (at reduced pulse lengths and repetition rates) so that *in situ* high peak power (HPP) processing of field emission sites may be performed. The coupler must be flexible because of 15 mm thermal contraction of the cavities during cool down. Two ceramic rf windows are necessary, one at 300 K and the other at 70 K. The 70 K window stays with the cavity at all times after the initial clean room assembly and is the primary barrier against cavity contamination. The warm window provides a backup to the 70 K window and allows for vacuum in the input coupler from 300 K to 70 K, hence reducing the heat load to the 70 K cryogenic system and minimizing condensation on the 70 K window. The coupler is required to have a variable external Q, as noted above, due to variations in the cavities, couplers, and rf distribution system. The coupler must have low heat leak and should be rf impedance matched to better than 20 dB return loss. Finally, the coupler must not be too expensive.

Input couplers for TESLA are being designed at Fermilab [2] and at DESY [3, 4]. This paper will focus primarily on the Fermilab coupler and testing performed to date, but will also include some report of the DESY design and status.

II. INPUT COUPLER DESIGN

Fermilab

The Fermilab input coupler is shown in Figure 1. This figure shows the input coupler penetrating the vacuum jacket and heat shield of the cryostat and connecting the WR650 waveguide to the 9-cell cavity. The waveguide-to-coaxial "doorknob" transition incorporates a cylindrical ceramic window at 300 K. The requirements of variable coupling and flexibility are met by the use of bellows on the inner and outer conductors. There is a pivot point outside the cryostat that allows the 2 K end of the coupler to move with the cavity during thermal cycling while the 300 K doorknob transition remains fixed. The 70 K window has a conical shape. The coupler is constructed of stainless steel thin wall tubing for low heat leak. The parts are copper plated to a thickness of approximately 10 microns. An enlargement of the doorknob transition is shown in Figure 2. The details of the conical ceramic window are shown in Figure 3.

The program HFSS was used in the design of the conical window. The actual construction of the window differs somewhat from the original model and has been re analyzed. The model used for the simulation is shown in Figure 4. This shows only half of the window. The lower part of the figure shows the inner conductor with a taper on one side of the ceramic for impedance matching. The triple points, where there is a vacuum, ceramic, braze interface, are shielded somewhat by placing them in recesses in the inner and outer conductors. The simulation results in a return loss of 22.5 dB at 1.3 GHz. Plots of the magnitude and phase versus frequency of the reflection coefficient are shown in Figure 5. Examination of the field results of the simulation show that the maximum electric fields occur at the inner conductor inside the cone of the ceramic. The shielding of the triple points is seen to be effective. The maximum magnetic fields occur near the inner conductor ceramic-to-copper braze joint. This could possibly lead to excessive heating if the conductivity of the braze material is too low.

The ceramics for both the 70 K and 300 K windows are 99.5 % Al_2O_3. They have been coated with a ≤ 10 micron layer of TiN by an evaporative process in a low pressure atmosphere of ammonia. This work has been done at Fermilab by M. Kuchnir.

An extensive thermal analysis of the input coupler has been performed by T. Peterson [5]. The results are shown in Figure 6.

DESY

The DESY input coupler design is shown in Figure 7. The waveguide-to-coaxial transition incorporates a cylindrical ceramic window in a reduced-height section of waveguide. Two double-bellows coaxial segments are used to meet the flexibility requirement. The 70 K window is cylindrical and is mounted rigidly to the cavity. Variable external Q is accomplished by an inner conductor bellows near the tip of the antenna. A control rod extends throughout the inner conductor to allow for coupling adjustments. The waveguide-to-coaxial transition is shown in more detail in Figure 8. The 70 K window is shown in Figure 9.

III. TESTING

Fermilab

Until recently, there has been no 1.3 GHz rf source available for high power testing at Fermilab. However, there is an 805 MHz system capable of 12 MW, 120 µs pulses at a rate of 15 Hz. This system was used earlier this year [6, 7] to perform high power testing on the coaxial section of the input coupler. A diagram of the test setup is shown in Figure 10. The boxes labeled "coupler" are waveguide-to-coaxial crossbar transitions. Waveguide windows are bolted to these transitions to separate the pressurized waveguide from the coaxial vacuum system of the device under test. Included on the diagram are the positions of various diagnostic devices. Photo multiplier tubes were mounted to the glass windows for light observation. Temperature monitoring was performed with thermocouples and with an infrared sensor. The infrared sensor viewed the surface of the conical ceramic through a KBr window. A VME based data acquisition system was used for data logging and fast capture of system parameters in the event of arcs, abnormal reflection, etc.

Conditioning of the coupler was started at a vacuum of 3e-7 Torr and an rf drive of 3.6 kW. The conditioning procedure was to increase the rf power until the vacuum degraded to approximately 1e-6 Torr. The power was then held steady until the vacuum improved to the range 2e-7 to 5e-7 Torr. At that point the power was again increased and the cycle was repeated. During the initial conditioning it required 6 hours to increase the power from 3.6 kW to 14.4 kW. A total of 51 hours were required to achieve a power level of 1.3 MW. This included two nights at fixed reduced power levels, one at 20 kW and the other at 100 kW. The longest running times at high power are summarized as follows:

17 hours	1 MW
90 minutes	1.4 MW
55 minutes	1.7 MW

At power levels ≥ 1.4 MW system interlocks frequently shut down the rf due to arcing. It was determined that the arcing was occurring in the test stand near the downstream crossbar transition. The position of light production during the arcing and post-testing visual inspection led to this determination. No arcs were detected in the input coupler throughout the testing. During the run at 1 MW, the temperature of the ceramic stabilized at 35.8°C.

Light was observed at power levels above 40 kW. A plot of rf power and detected light at one of the photo multiplier tubes versus time is shown in Figure 11. A similar plot is shown in Figure 12 for operation of the test stand a week later. Note that the light emission is greatly reduced due to the effects of conditioning. A crescent shaped bluish light was visually observed on the upstream side of the ceramic window. The vacuum and light activity during the testing indicate that multipacting was probably occurring during the testing, but it was not severe enough to cause breakdown, and it was reduced by conditioning.

DESY

The DESY 70 K window has been tested in a 3/2 wavelength coaxial resonator. The window was positioned at a voltage maximum. Two windows were tested, one with a TiN coating, and the other without a coating. No difference in performance was observed.

Electron activity was noted at the voltage minimums during the test. This may be an indication that it is advantageous to position the window at the voltage maximum.

IV. FUTURE WORK

Clearly, more testing is necessary. More 805 MHz testing may be performed at Fermilab, but this is not sufficient as it does not allow for testing of the waveguide-to-coaxial transition. Also, it does not reveal the multipacting problems which may occur at 1.3 GHz.

A 1.3 GHz test stand is now being commissioned at Fermilab. It has been tested thus far to power levels of approximately 100 kW. A future modulator upgrade is planned that will increase the klystron output to several hundred kW. A floor plan of the test stand is shown in Figure 13.

Since testing to power levels greater than 1 MW is desirable, it is planned to use a resonant ring with the test stand. A cryostat (see Figure 14) is being developed [8] that will allow for cold testing of two input couplers attached to a single-cell Niobium cavity. With this test setup it will be possible to make careful measurements of the input coupler heat leak. The rf performance of the coupler and coupler/cavity interactions will also be explored. A similar cryostat is being designed at

DESY. However, it will be cooled only with liquid Nitrogen and is primarily intended for input coupler conditioning. The cryostat is shown in Figure 15. Note that two input couplers may be conditioned simultaneously and that they are coupled together by a waveguide.

A 4.5 MW, 1.3 GHz test stand is nearly ready for commissioning at Fermilab. This rf system was designed and built specifically for the TESLA Test Facility at DESY. The system should ship to DESY near the end of this year and will make possible high power coupler testing at DESY.

A different design for the waveguide-to-coaxial transition and 300 K window may be desirable. One possibility is to separate the window and the transition as illustrated in Figure 16. This is a computer model of a windowless doorknob transition with a planar waveguide window and matching posts nearby.

V. REFERENCES

[1] *A Proposal to Construct and Test Prototype Superconducting RF Structures for Linear Colliders*, DESY, 1992.
[2] M. Champion, D. Peterson, T. Peterson, C. Reid, M. Ruschman, "TESLA Input Coupler Development," Fermilab, IEEE Particle Accelerator Conference, 1993.
[3] B. Dwersteg, M. Marx, D. Proch, "Conceptual Design of a RF Input Coupler for TESLA," DESY, 1992.
[4] B. Dwersteg, "TESLA Main Coupler Development at DESY," these proceedings.
[5] T. Peterson, "Fermilab Input Coupler Heat Calculations," Fermilab, 1993.
[6] D. Sun, M. Champion, M. Gormley, Q. Kerns, K. Koepke, A. Moretti, "High Power Test of RF Window and Coaxial Line in Vacuum," Fermilab, IEEE Particle Accelerator Conference, 1993.
[7] D. Sun, K. Koepke, "Report on First TESLA Window Assembly Test," Fermilab, 1993.
[8] M. Kuchnir, "TESLA Coupler Testing Cryostat," these proceedings.

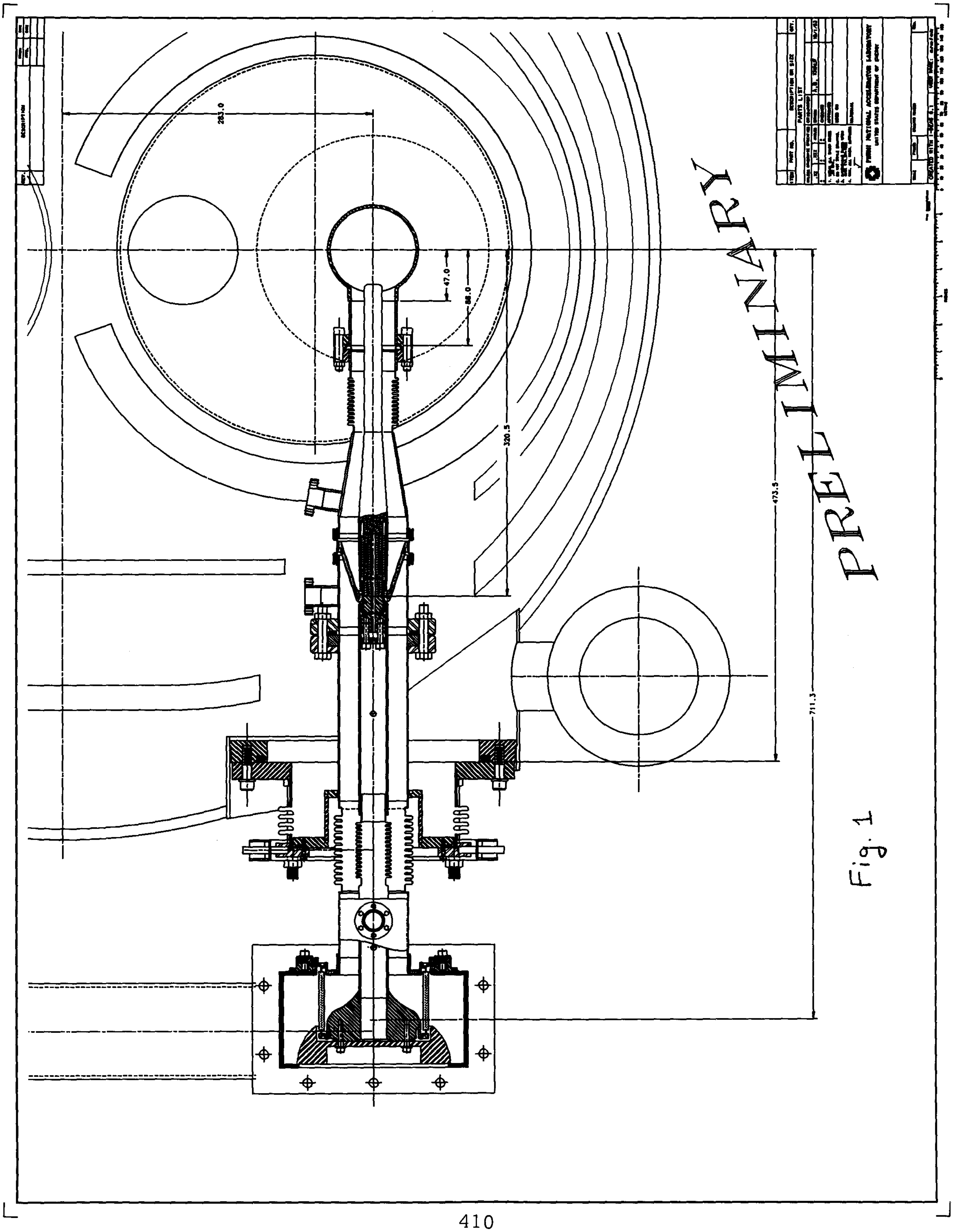
283.0
47.0
88.0
320.5
473.5
711.3
PRELIMINARY
PARTS LIST
DESCRIPTION OR SIZE
PART NO.
ITEM
QTY.
A.B. 10/1/93
FERMI NATIONAL ACCELERATOR LABORATORY
UNITED STATES DEPARTMENT OF ENERGY
CREATED WITH I-DEAS 6.1

Fig. 1

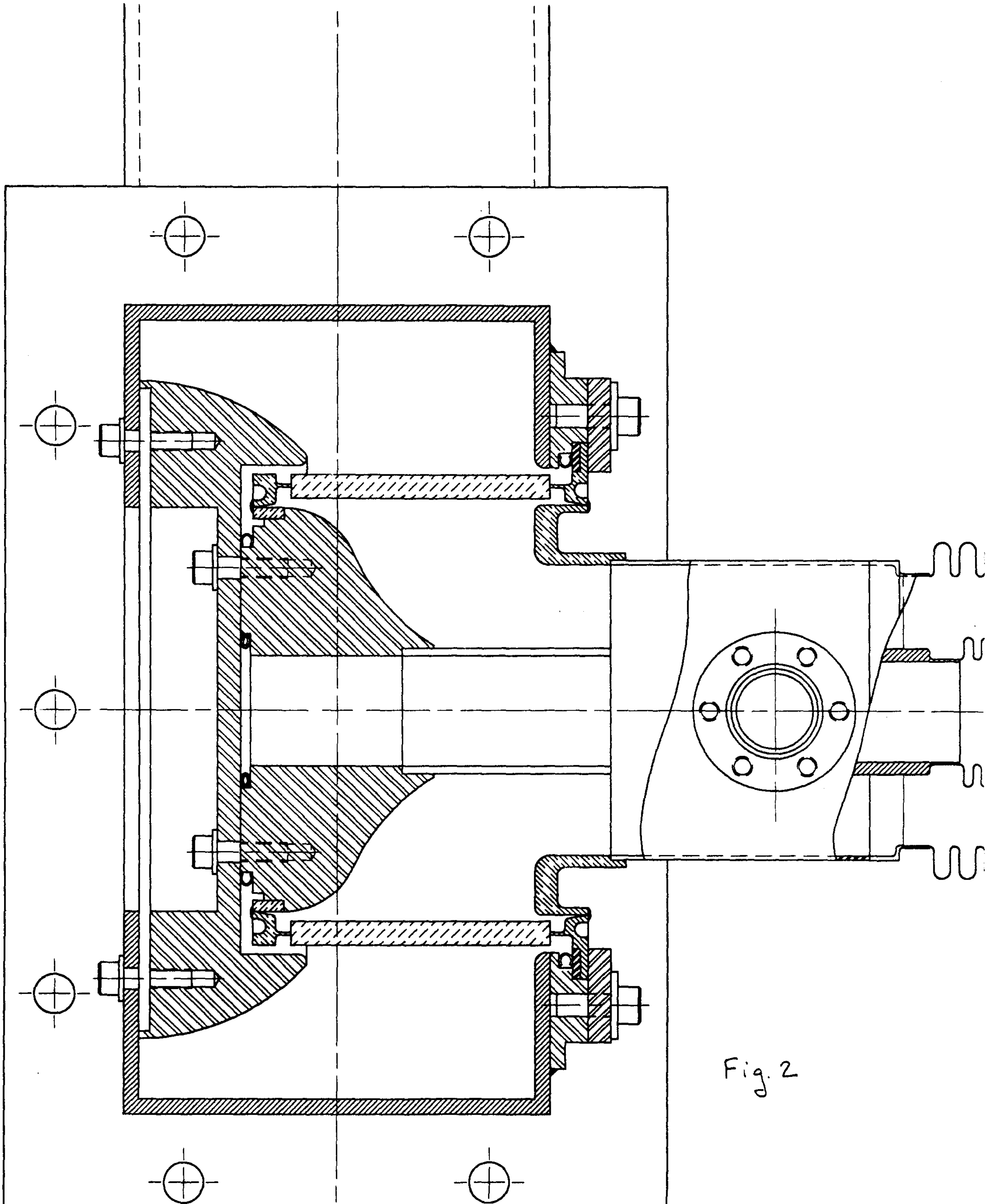

Fig. 2

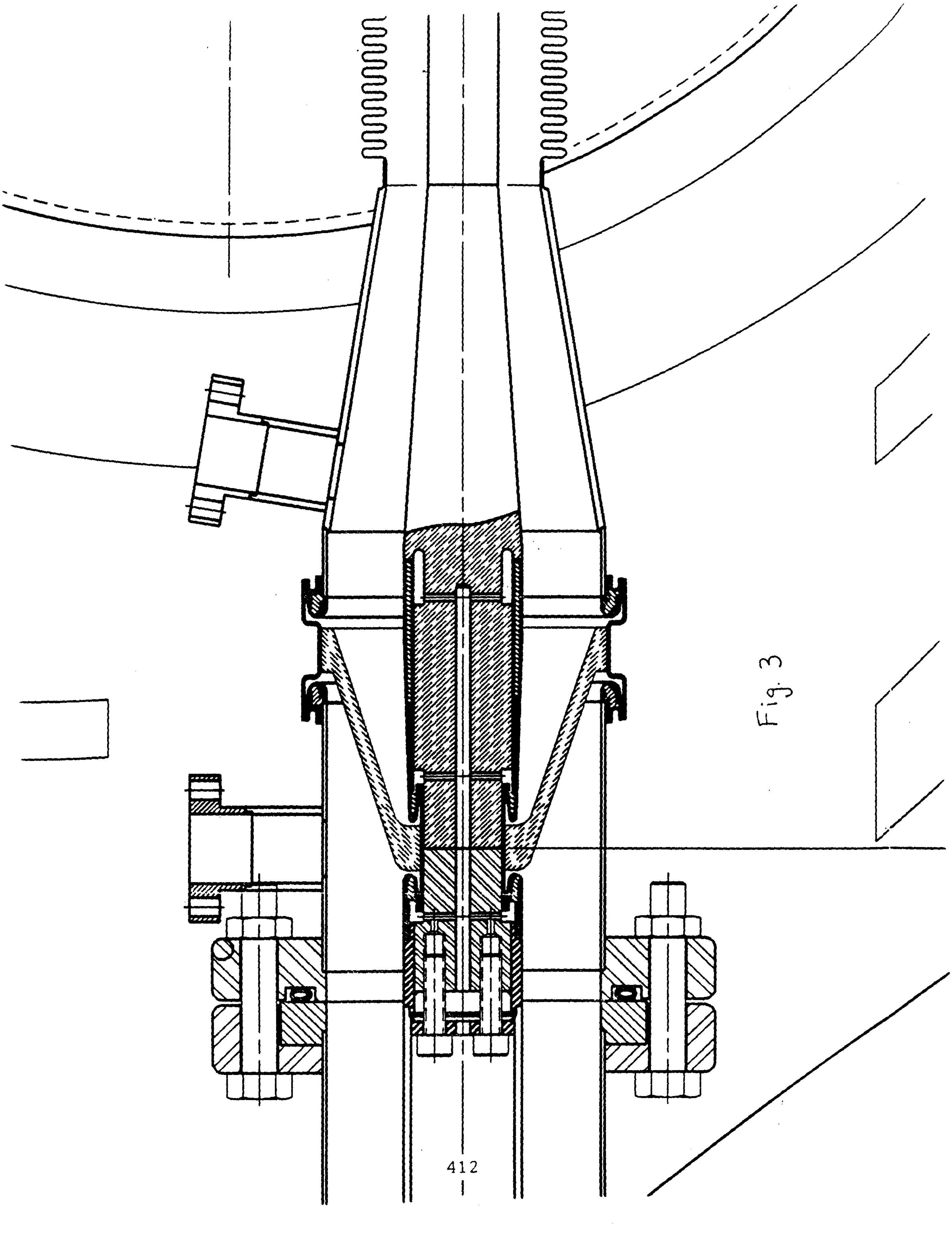

Fig. 3

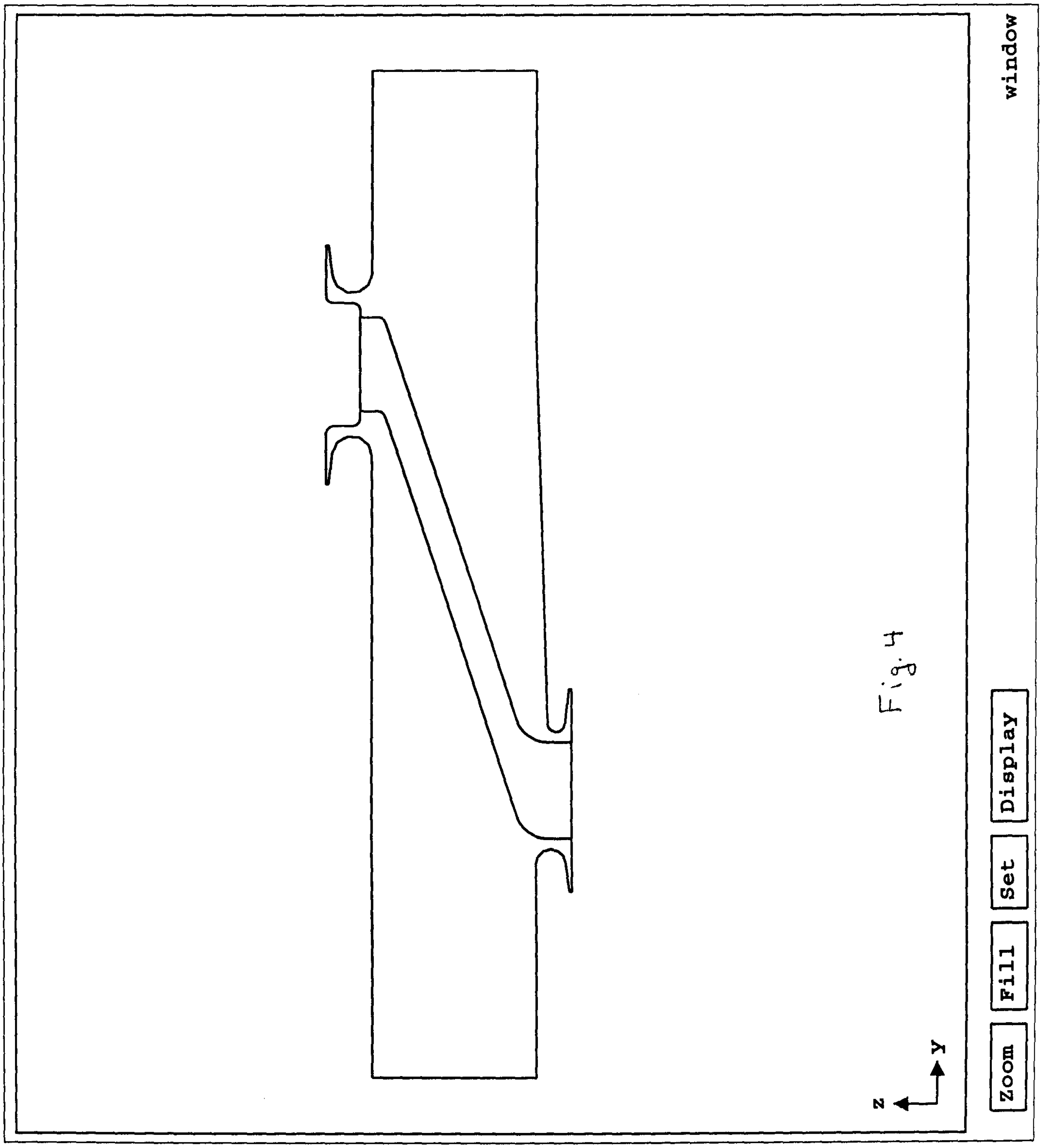

Fig. 4

Fig. 5

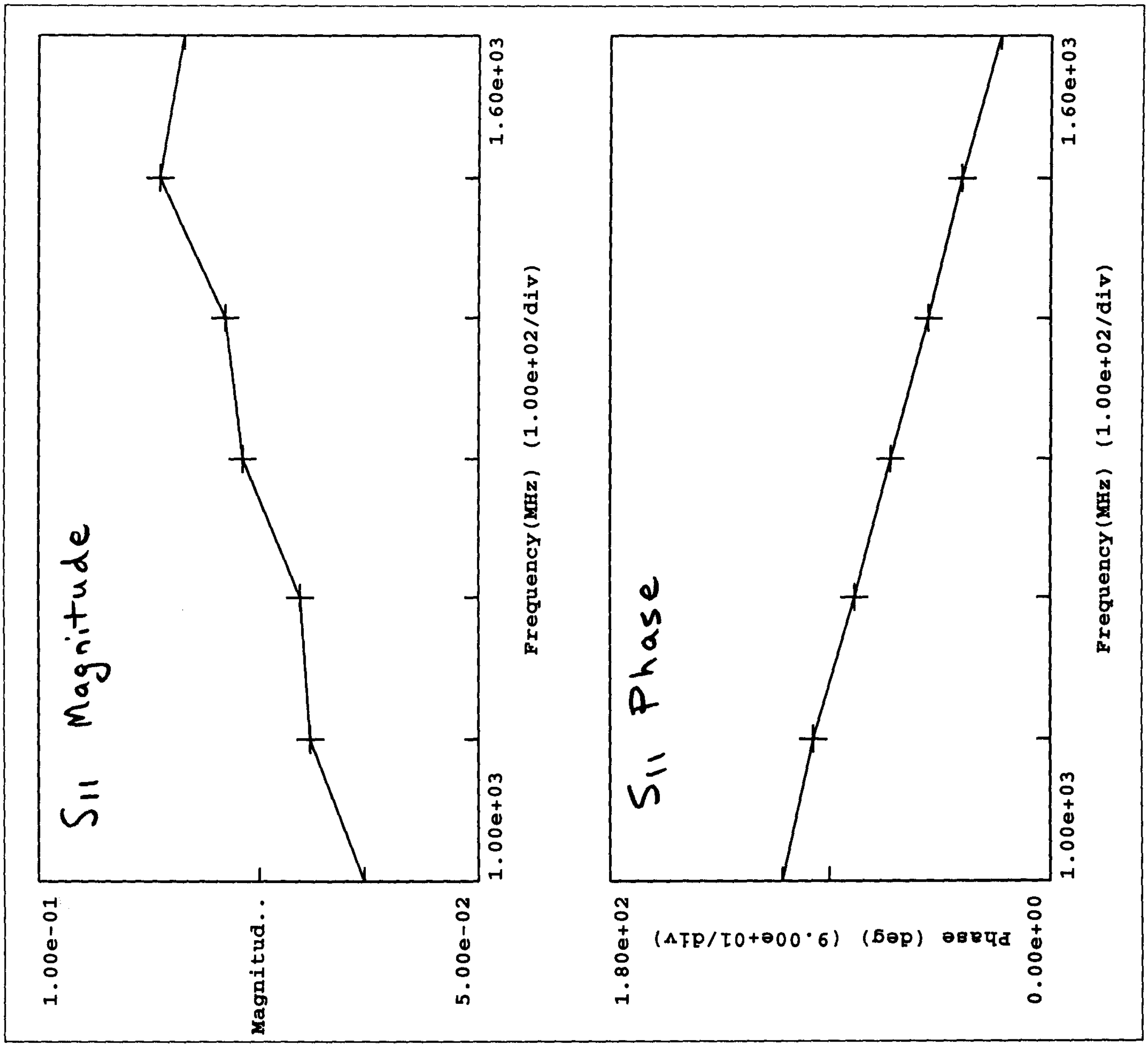
S11 Magnitude
1.00e-01
Magnitud..
5.00e-02
1.00e+03
1.60e+03
Frequency(MHz) (1.00e+02/div)
S11 Phase
1.80e+02
Phase (deg) (9.00e+01/div)
0.00e+00
1.00e+03
1.60e+03
Frequency(MHz) (1.00e+02/div)

Fermilab

Coupler Heat Summary Table
for 2.0 K, 4.5 K and 70 K Temperature Levels

No power, and **208000 Watts peak power (25 MV/m)**

	2.0 K Watts	4.5 K Watts	70 K Watts
2 K to 5 K outer conductor	*0.03* 0.06	*-0.03* 0	0 0
5 K to 70 K outer conductor	0 0	*0.35* 0.49	*-0.4* -0.1
70 K to 300 K outer conductor	0 0	0 0	*2.0* 2.4
70 K lower, inner antenna	0 0	0 0	0 1.1
70 K to 300 K inner conductor	0 0	0 0	*0.6* 2.0
SUM	*0.03* 0.06	*0.32* 0.49	*2.2* 5.4
Room temperature cooling power	*24* 48	*80* 123	*31* 76

STATIC
DYNAMIC

Room temperature cooling power is calculated as 800 W/W times 2.0 K Watts, 250 W/W times 4.5 K Watts, 25 W/W times 40 K Watts, and 14 W/W times 70 K Watts.
Total room temperature power required per coupler is 135 Watts with no power and 247 Watts under full power.

Fig. 6

Thermal calculations performed by Tom Peterson of Fermilab.

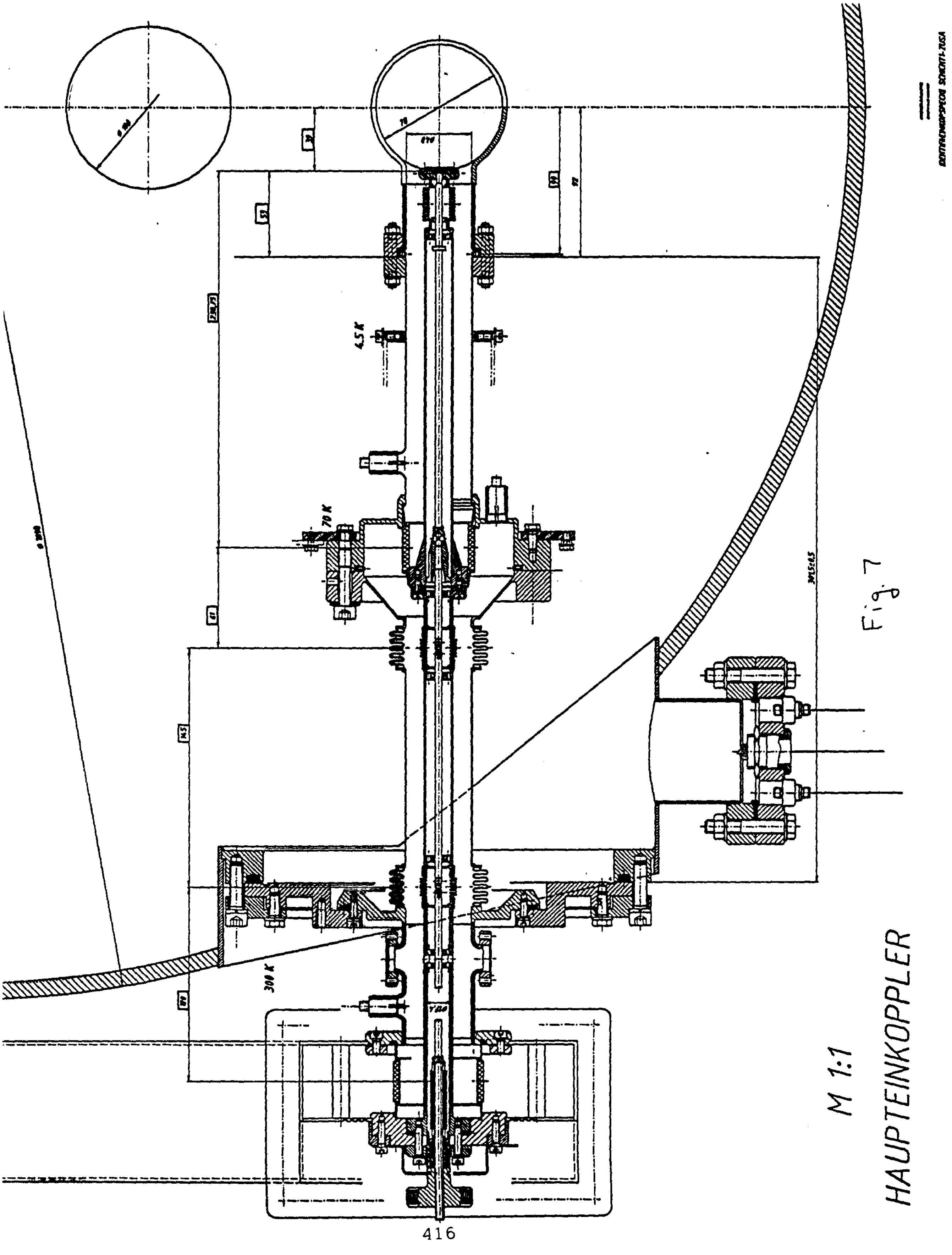

Fig. 7

M 1:1

HAUPTEINKOPPLER

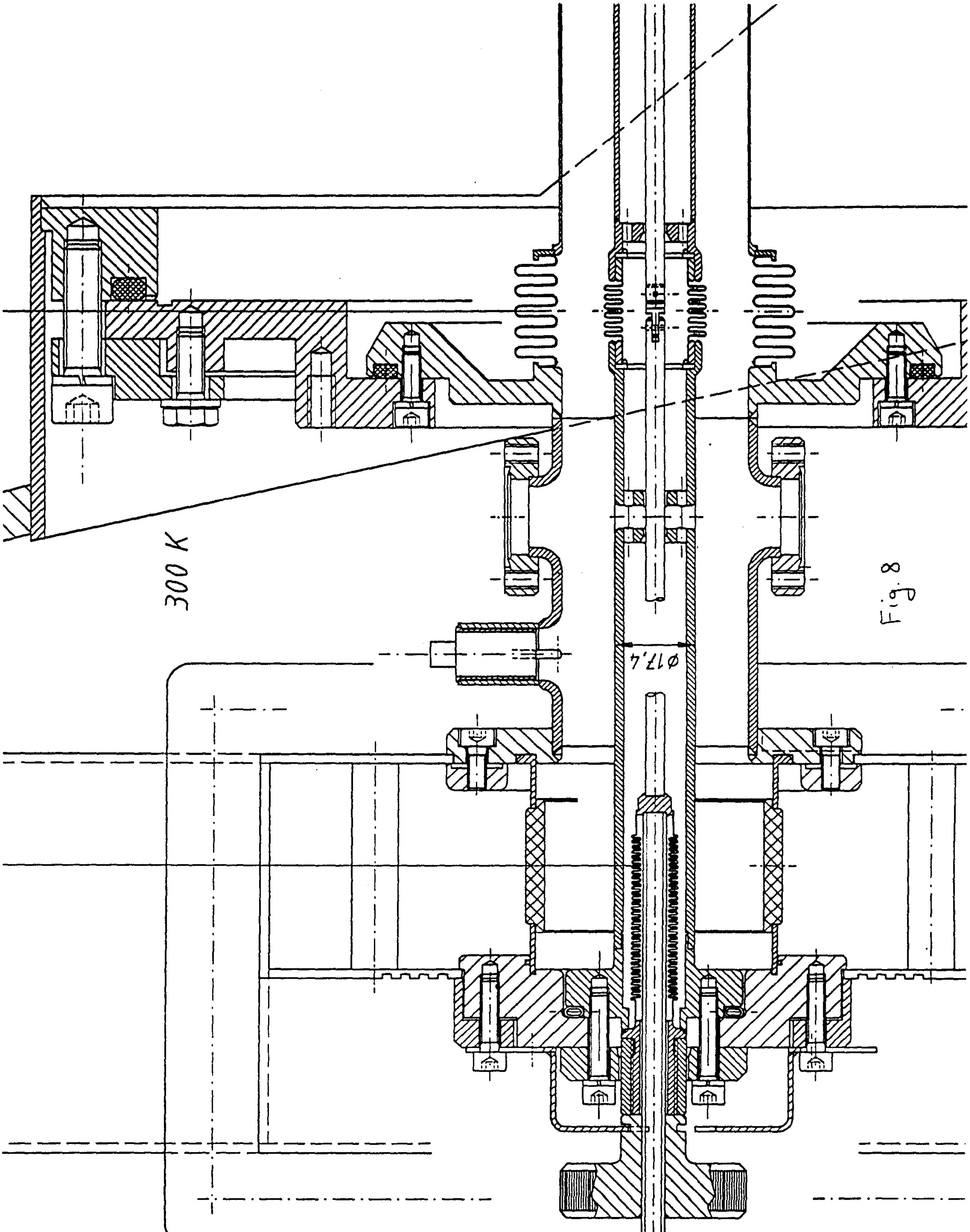

Fig. 8

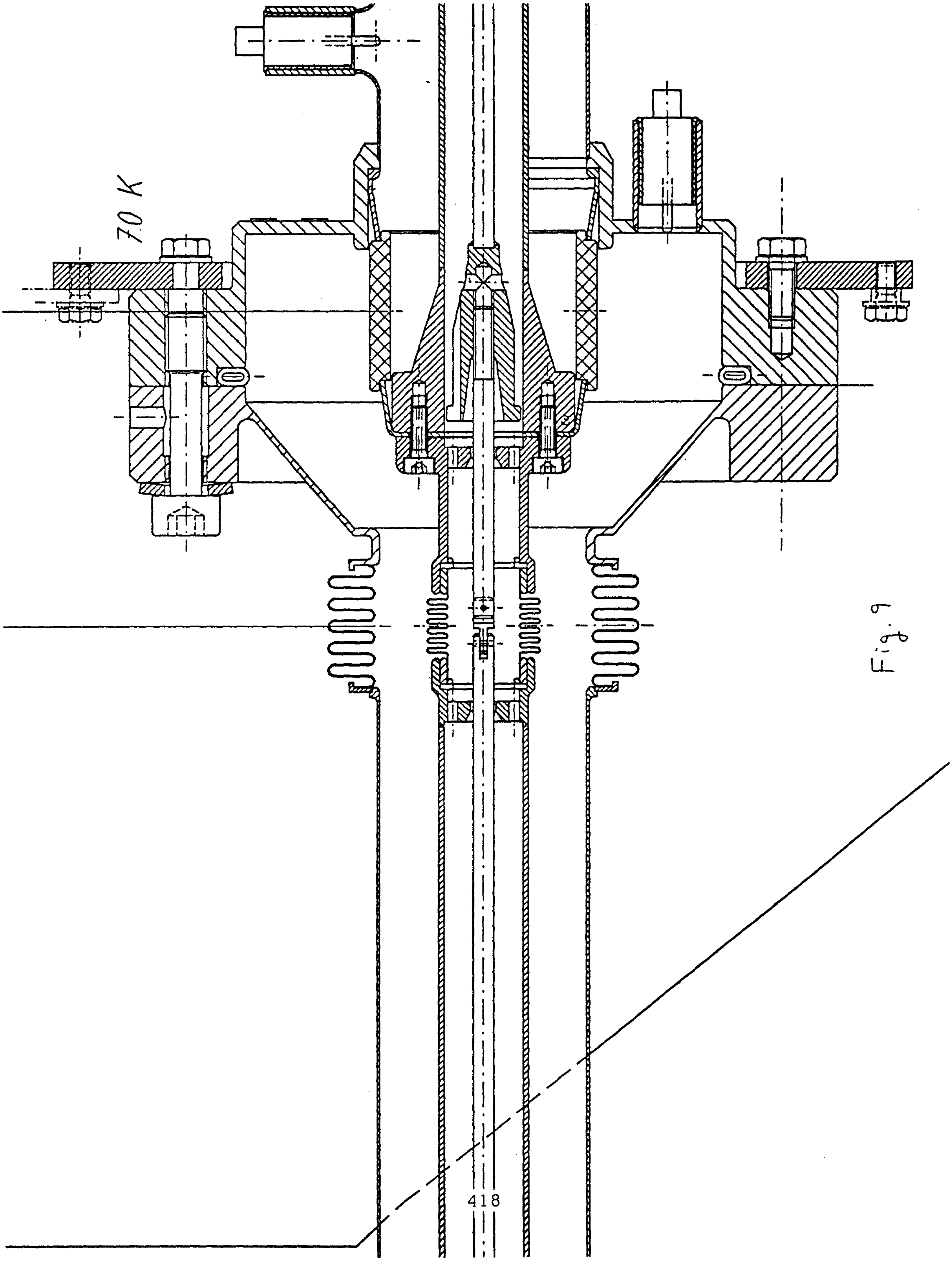

Fig. 9

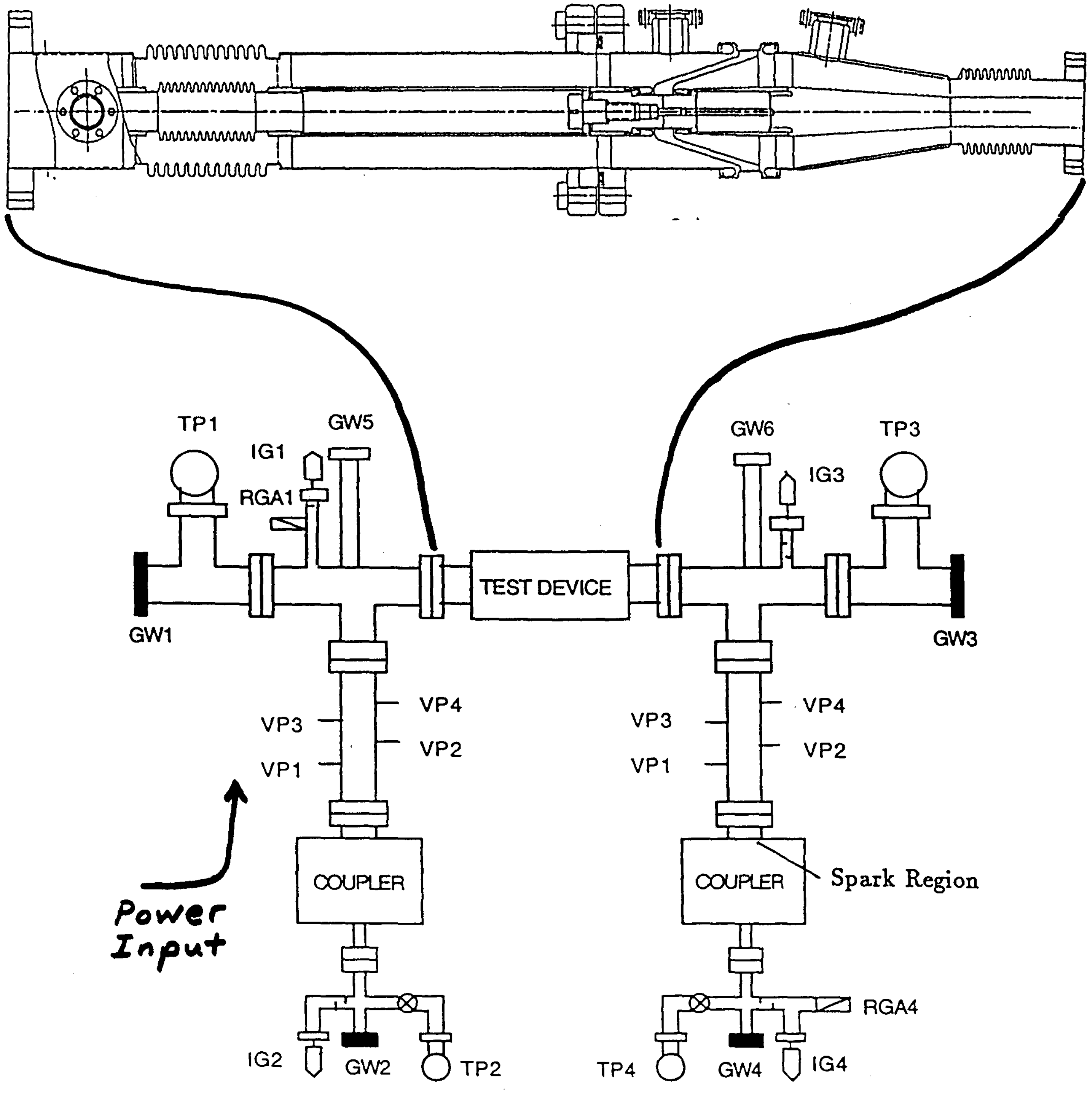

TP: TURBO PUMP
IG: ION GAUGE
RGA: RESIDUAL GAS ANALYZER
GW: GLASS WINDOW
VP: VOLTAGE PROBE

Fig. 10

~~Fig.5~~ PHOTOMULTIPLIER (PM #1) OUTPUT AND RF POWER VERSUS TIME

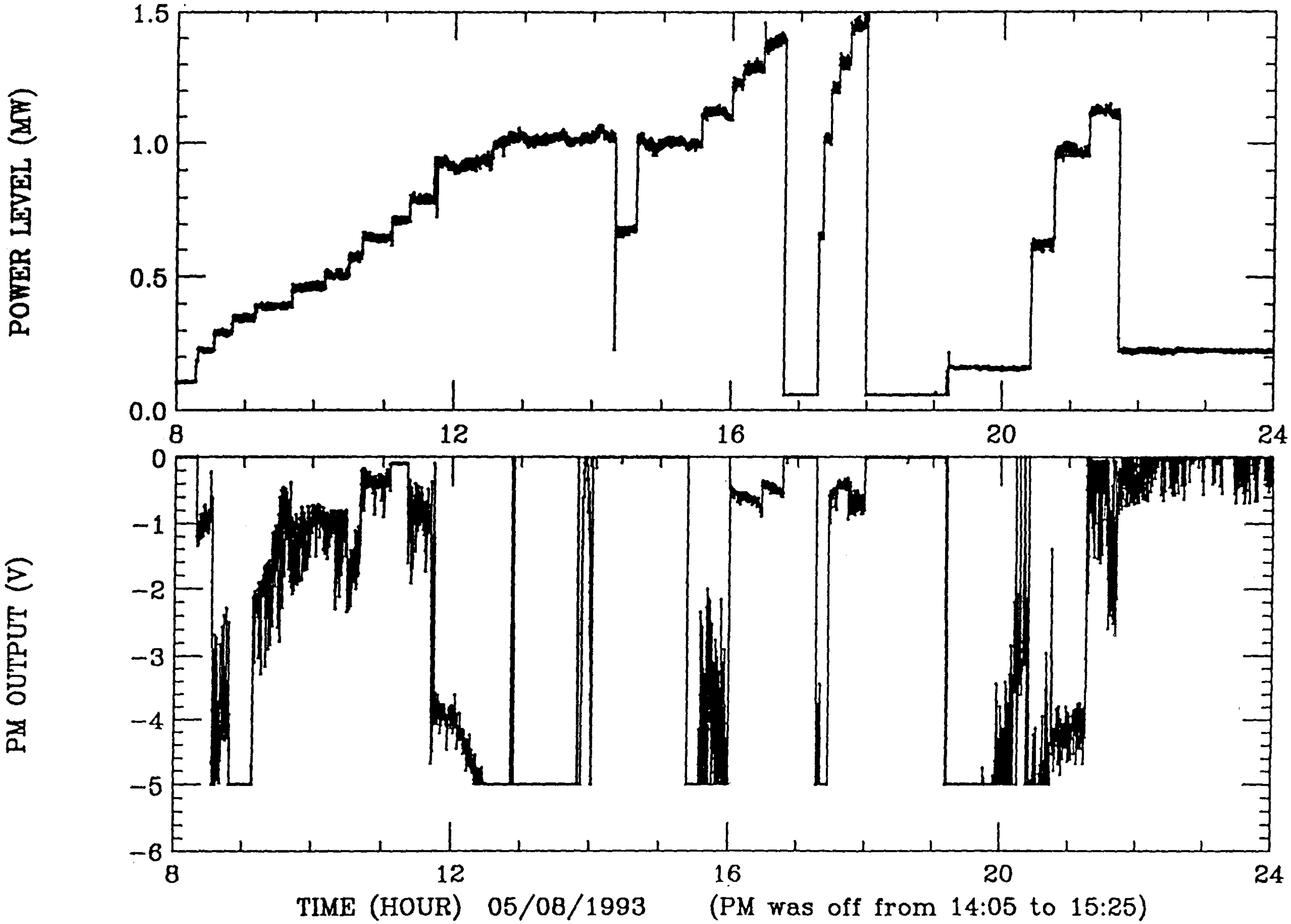

Fig. 11

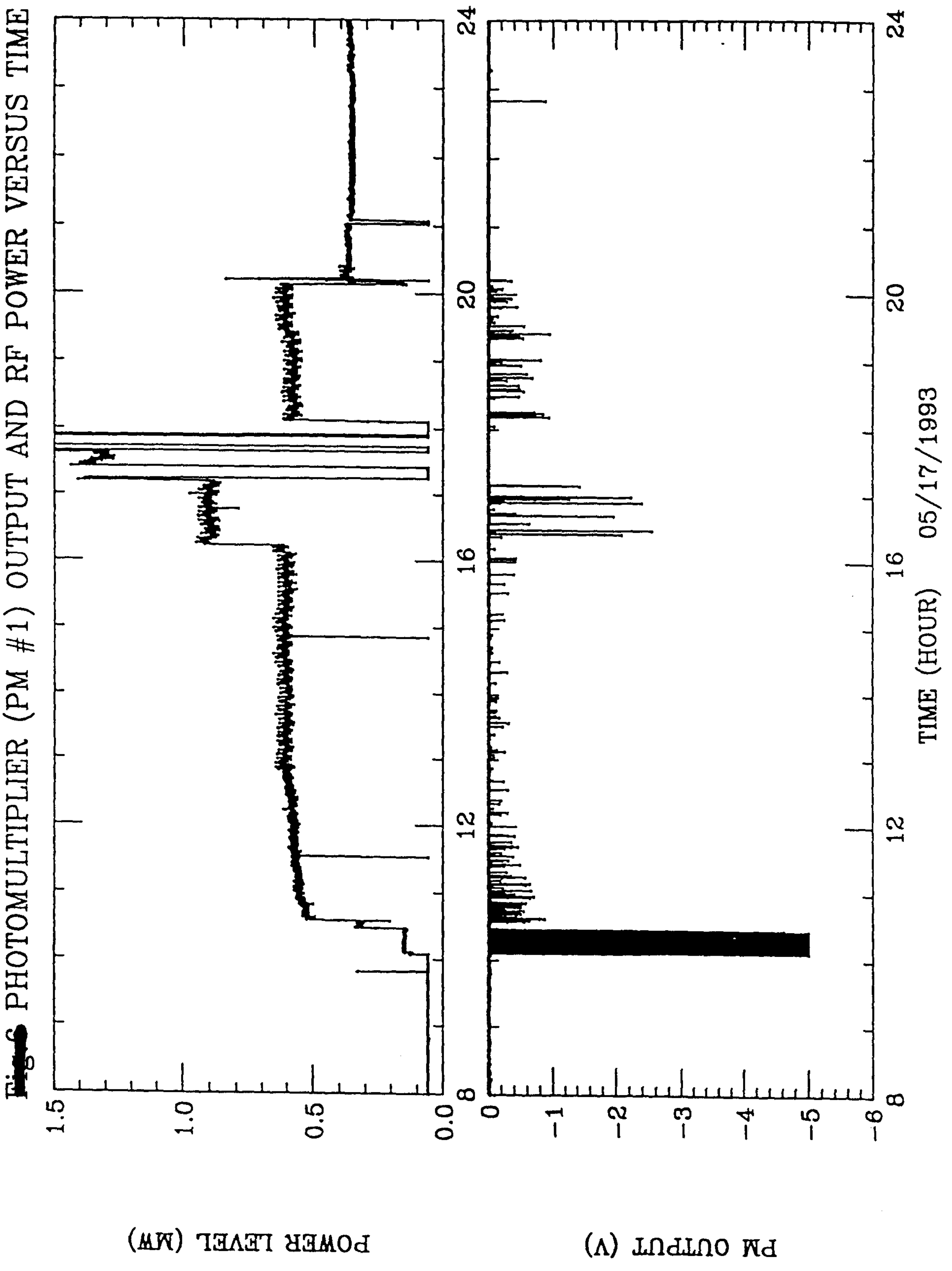
~~Fig 6~~ PHOTOMULTIPLIER (PM #1) OUTPUT AND RF POWER VERSUS TIME
POWER LEVEL (MW)
1.5
1.0
0.5
0.0
PM OUTPUT (V)
0
−1
−2
−3
−4
−5
−6
8
12
16
20
24
TIME (HOUR) 05/17/1993

Fig. 12

FNAL Lab2 Floor Plan

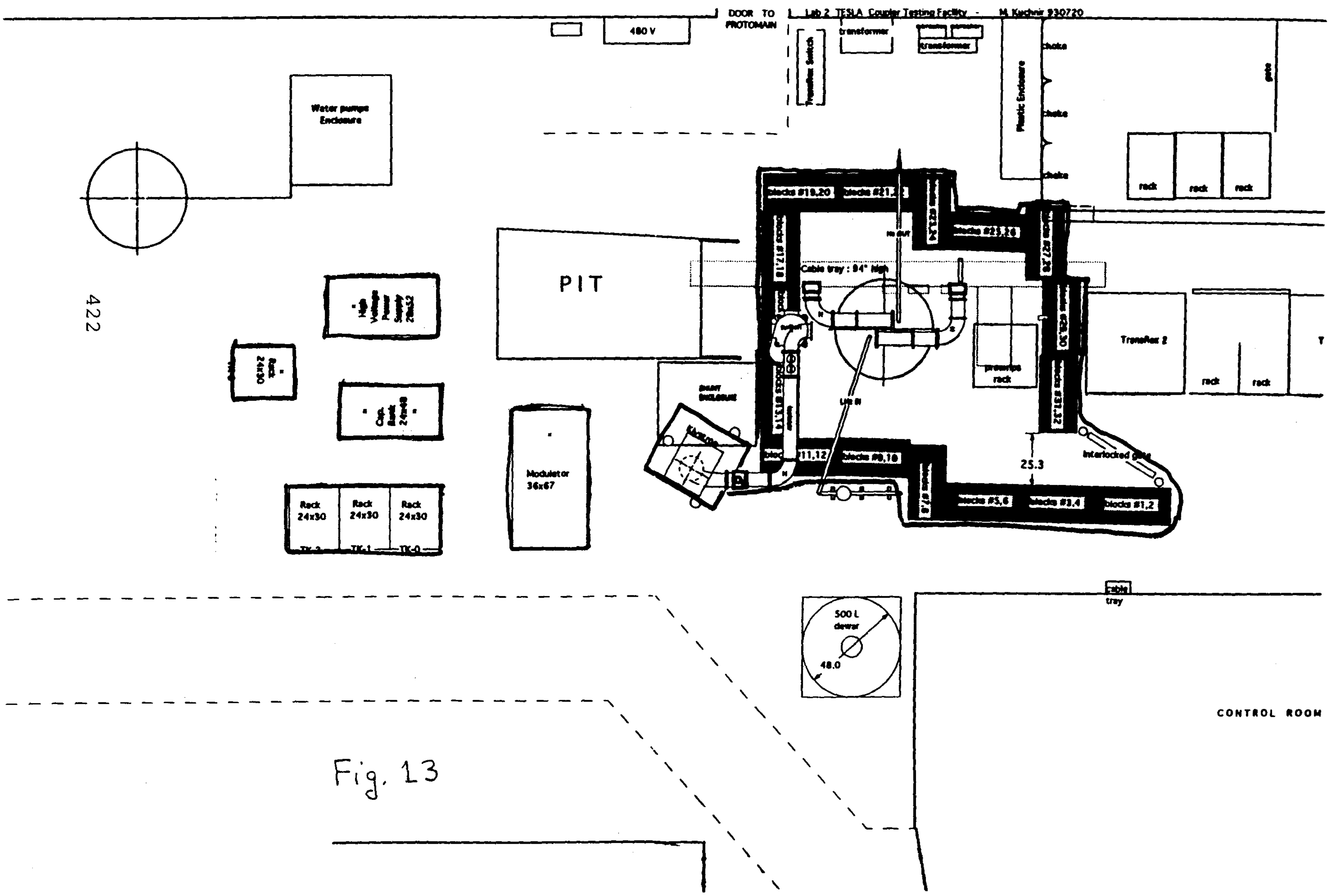

Fig. 13

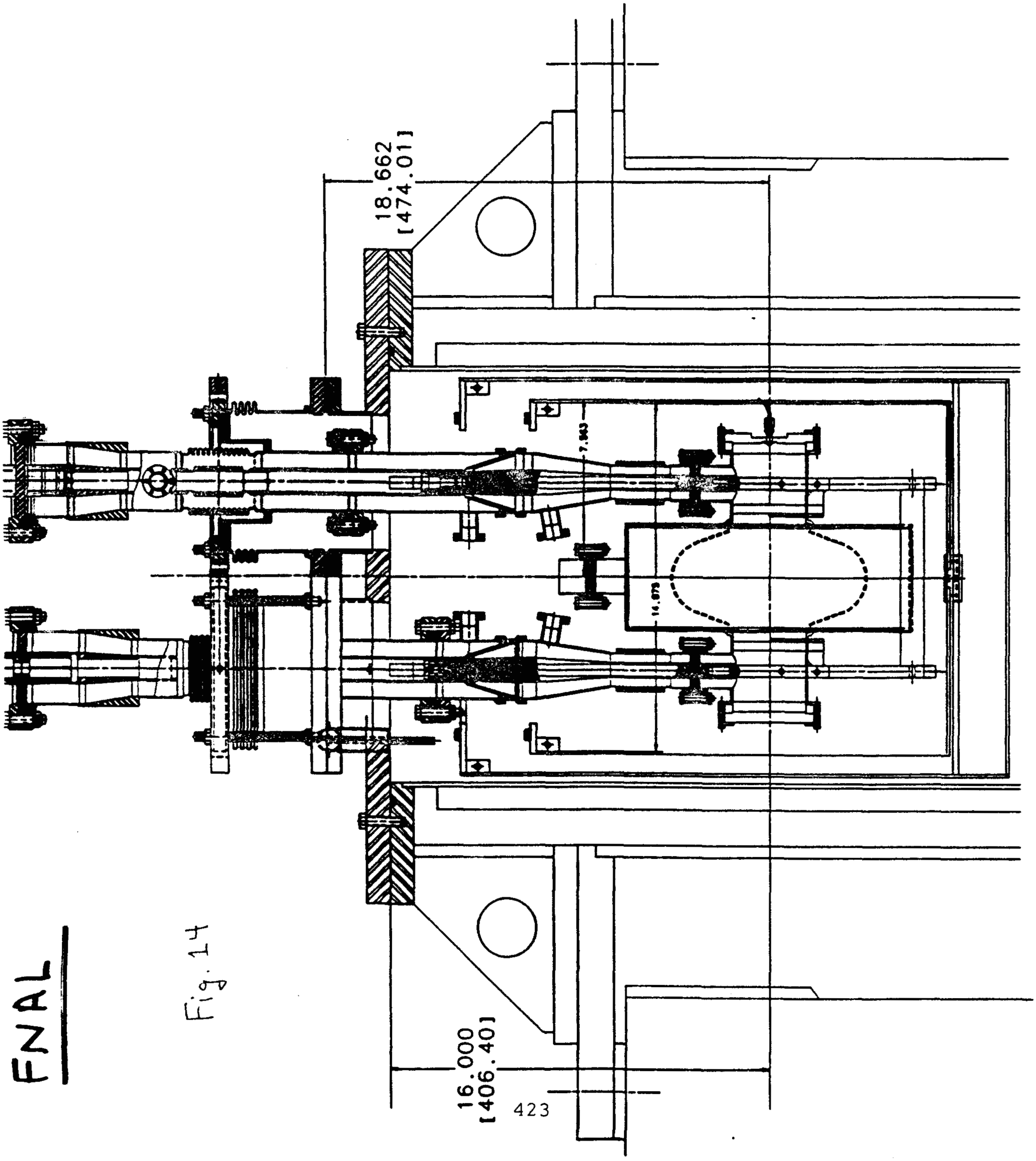

FNAL

Fig. 14

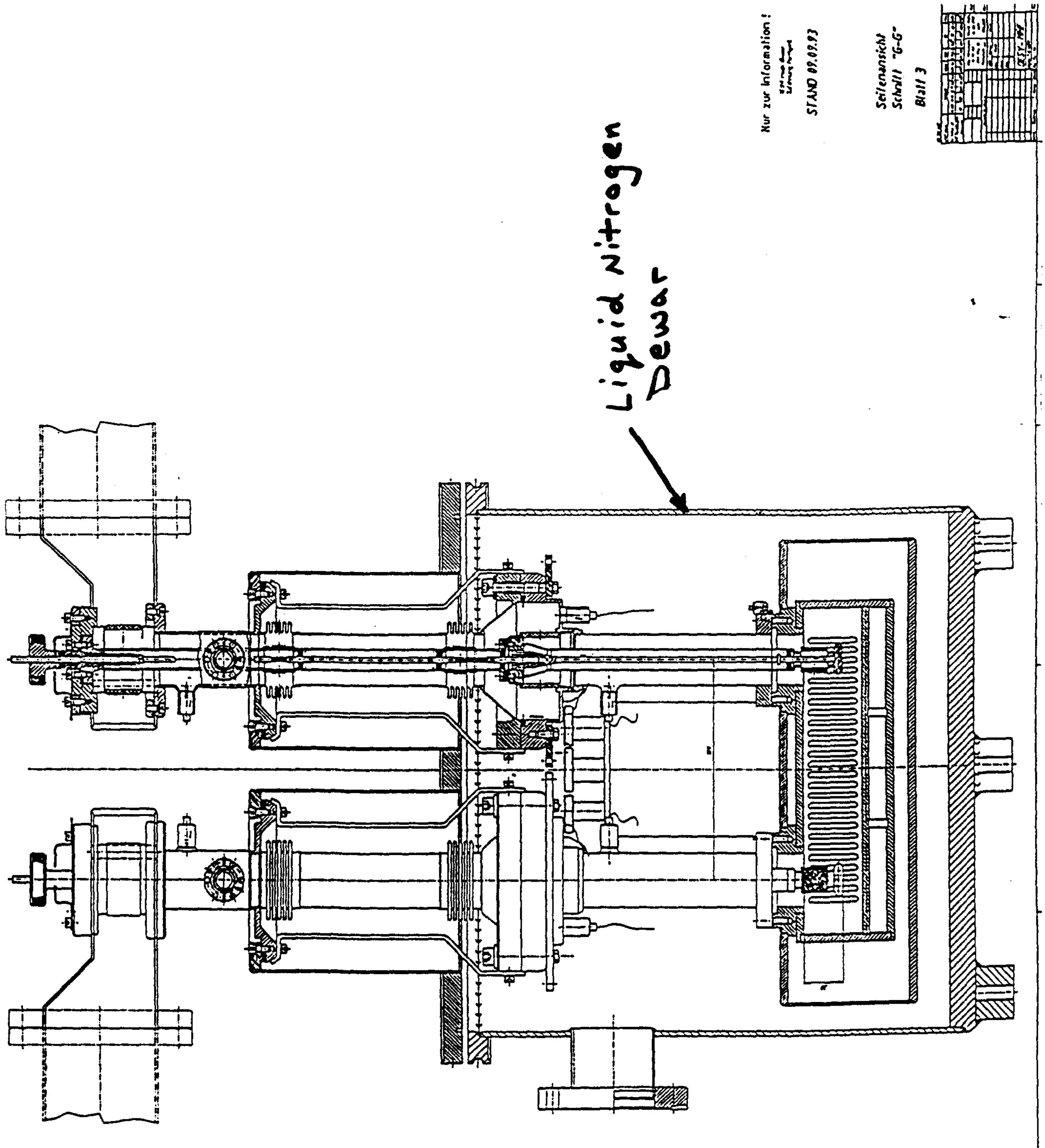
Liquid Nitrogen Dewar
Nur zur Information!
STAND 09.09.93
Seitenansicht
Schnitt "G-G"
Blatt 3
DESY-MV

Fig. 15

DESY

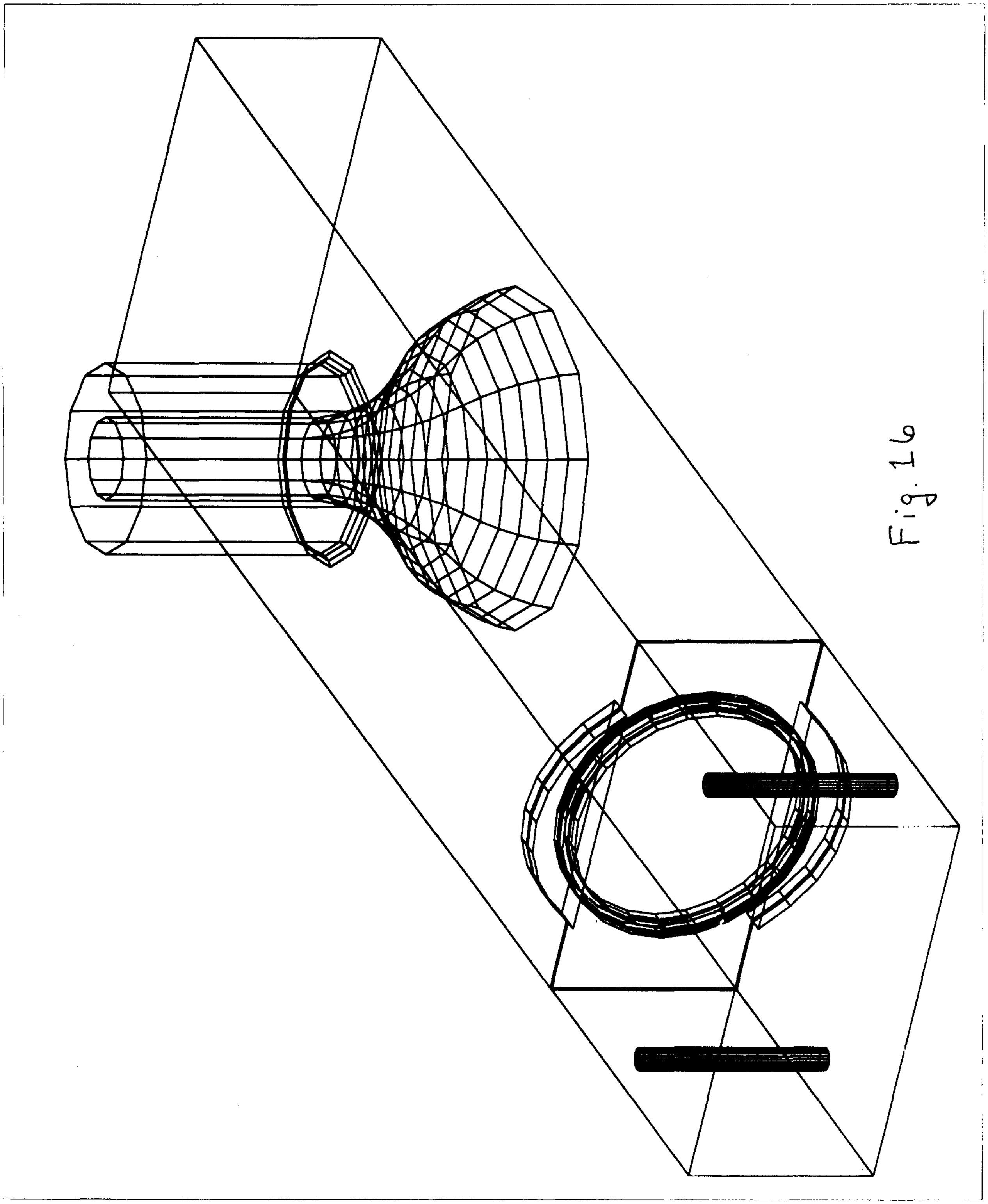

Fig. 16